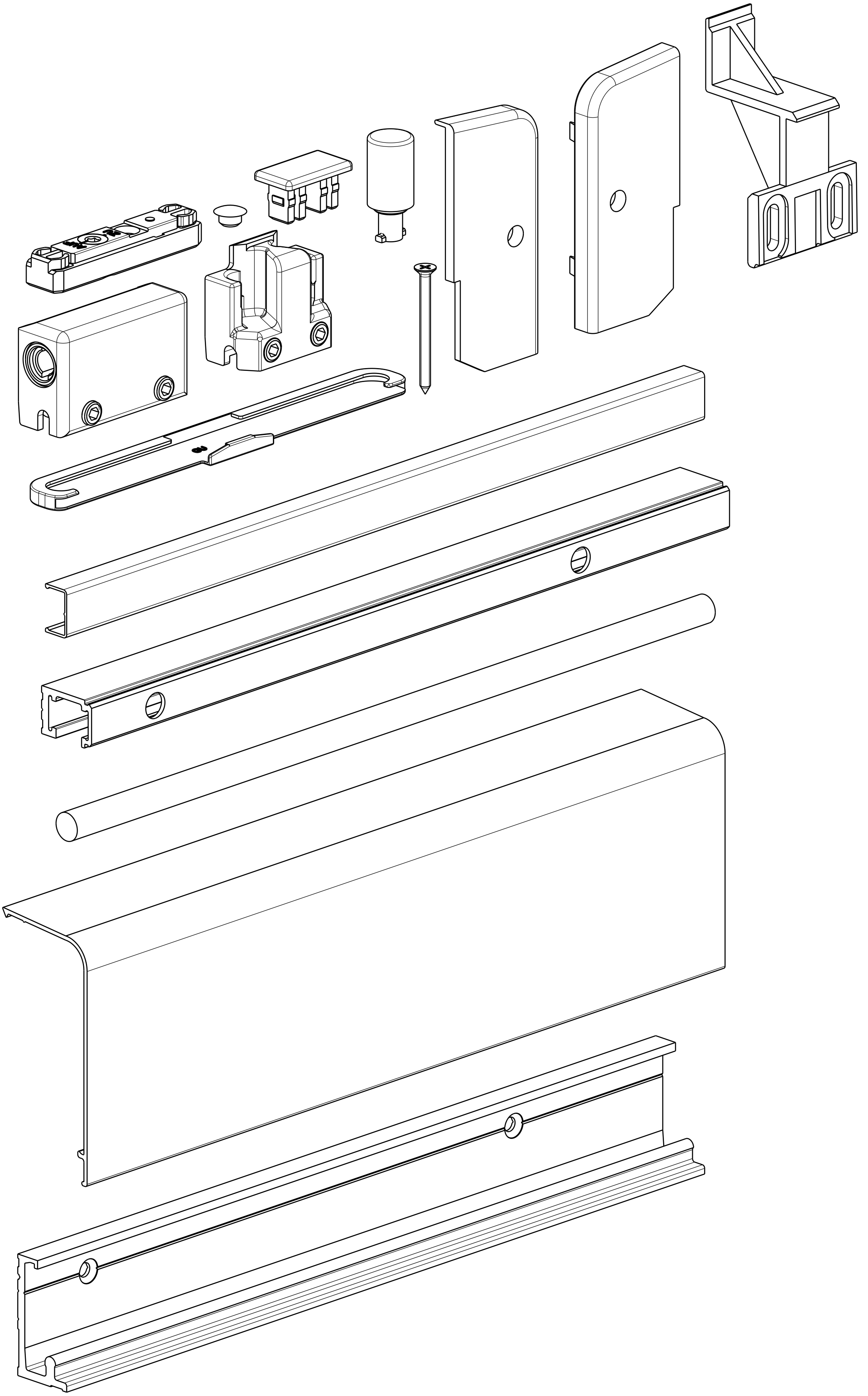

G-U		
K-15269-45-0		
Scale 1:1		
Draft	28.04.2022	Dr